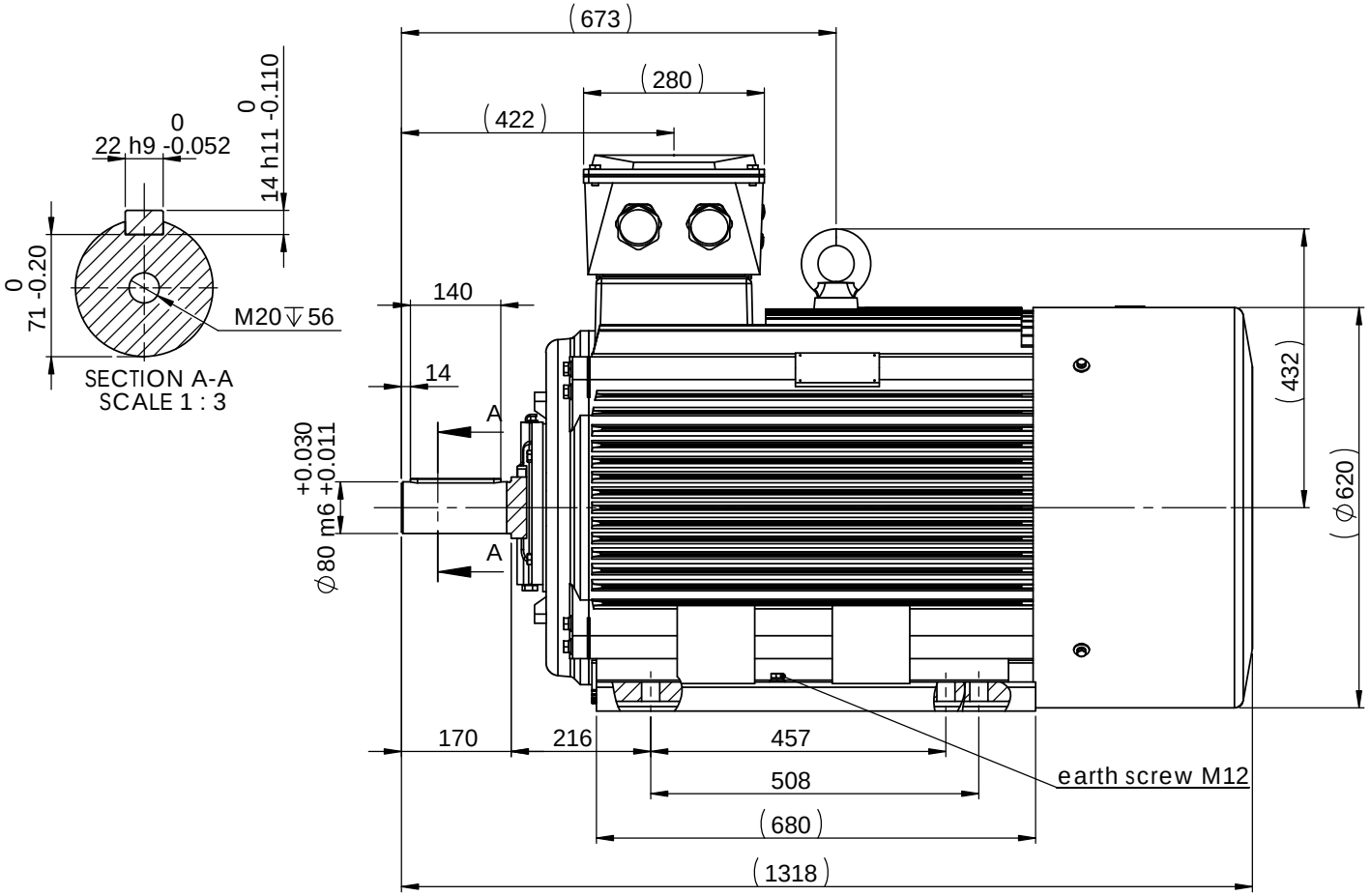

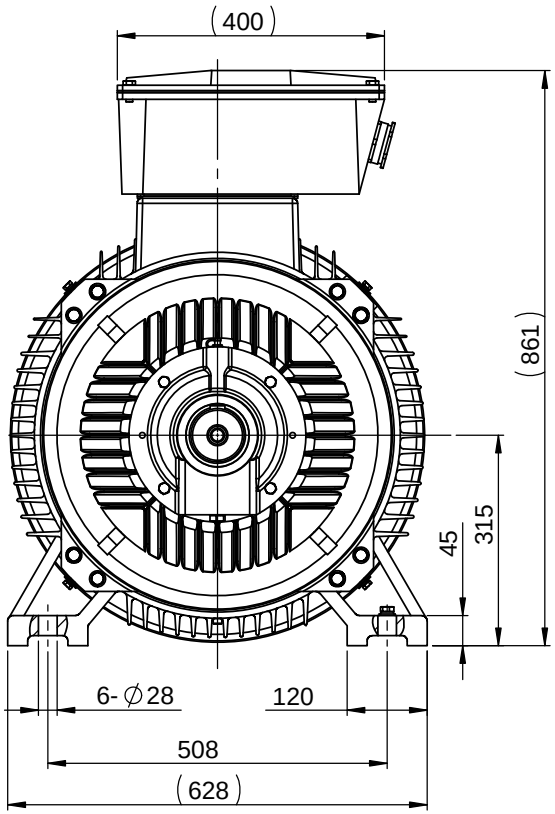

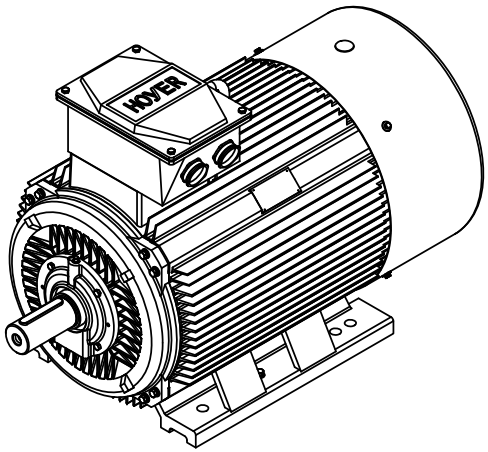

Remark:

1. Eye bolt M30
2. Cable glands are 2xM63x1.5 and Blind caps are 2xM20x1.5

HOYER EXCEEDING EXPECTATIONS	Hoyer Motors Over Hadstenvej 42, DK-8370 Hadsten Tel : +45 86982111 Fax: +45 86981779 www.hoyermotors.com			DEBUR AND BREAK SHARP EDGES	DO NOT SCALE DRAWING	REVISION 01
	NAME	SIGNATURE	DATE		TITLE: HMC2-315M,L-4,6p-B3	
DRAWN	TIH		20111017			
CHK'D						
APPV'D						
MFG						
Q.A				MATERIAL: cast iron	DWG NO. 70015	A3
				WEIGHT: Kg	SCALE:1:10	SHEET 1 OF 1

© 2010 Hoyer Motors All intellectual property rights and all rights in know-how in relation to this drawing may not be reproduced, stored, or transmitted in any form by any means (electronic, mechanical,photocopying, recording or otherwise) without the prior written consent of Hoyer Motors. It is to be used only for the purposes specified by Hoyer Motors and for no other purpose.