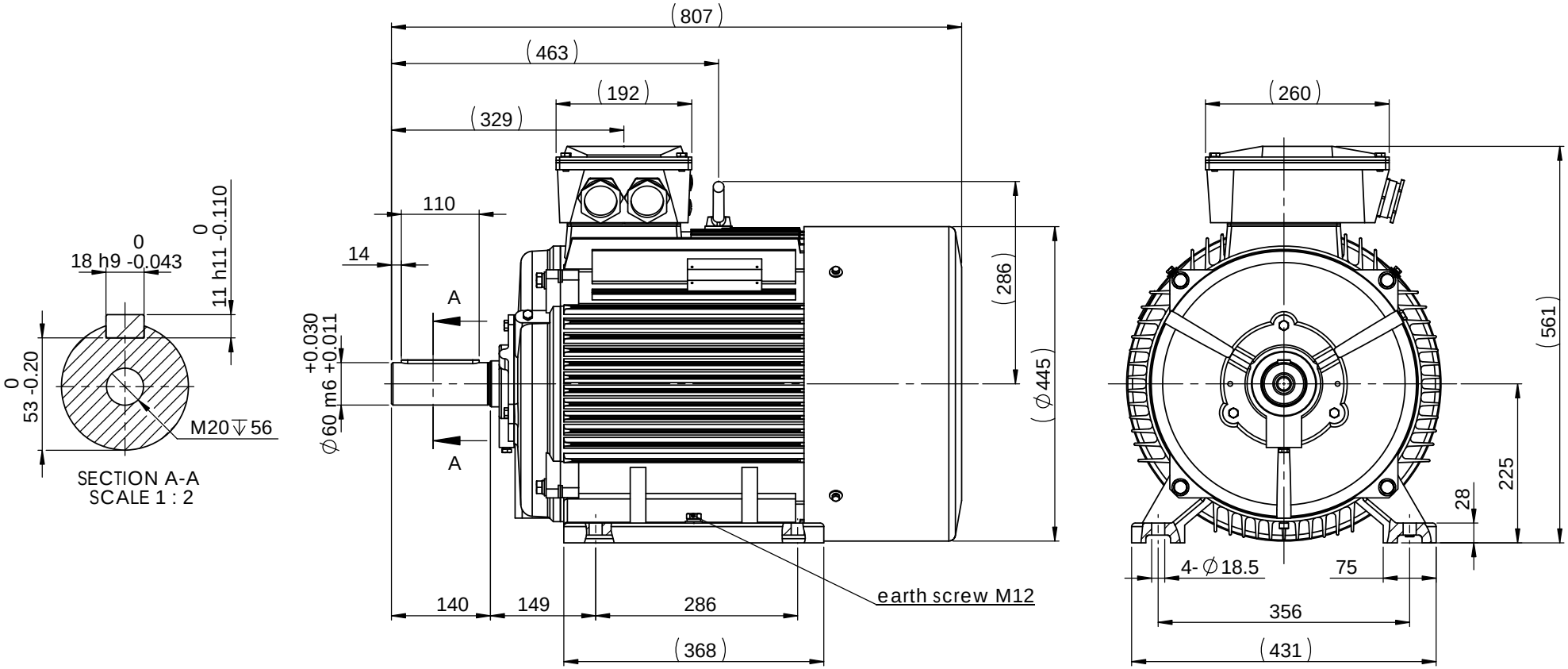


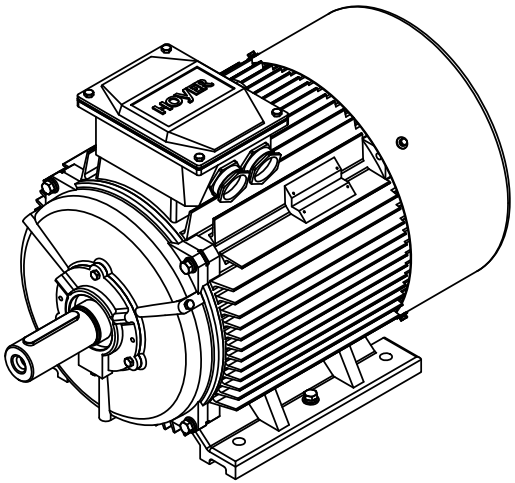


## Remark:

1. Eye bolt M16
2. Cable glands 2xM50x1.5 and Blind caps 2xM20x1.5


HOYER
EXCEEDING EXPECTATIONS

Hoyer Motors
Over Hadstenvej 42, DK-8370 Hadsten
Tel : +45 86982111
Fax: +45 86981779
www.hoyermotors.com


DEBUR AND BREAK SHARP EDGES

DO NOT SCALE DRAWING

REVISION 02

| | NAME | SIGNATURE | DATE |
|---|---|---|---|
| DRAWN | TIH | | 20150311 |
| CHK'D | | | |
| APPV'D | | | |
| MFG | | | |
| Q.A | | | |

TITLE: HMC2-225S-4p-B3

MATERIAL: cast iron

WEIGHT: Kg

DWG NO. 70030

A3

SCALE:1:10

SHEET 1 OF 1


© 2010 Hoyer Motors All intellectual property rights and all rights in know-how in relation to this drawing may not be reproduced, stored, or transmitted in any form by any means (electronic, mechanical,photocopying, recording or otherwise) without the prior written consent of Hoyer Motors. It is to be used only for the purposes specified by Hoyer Motors and for no other purpose.