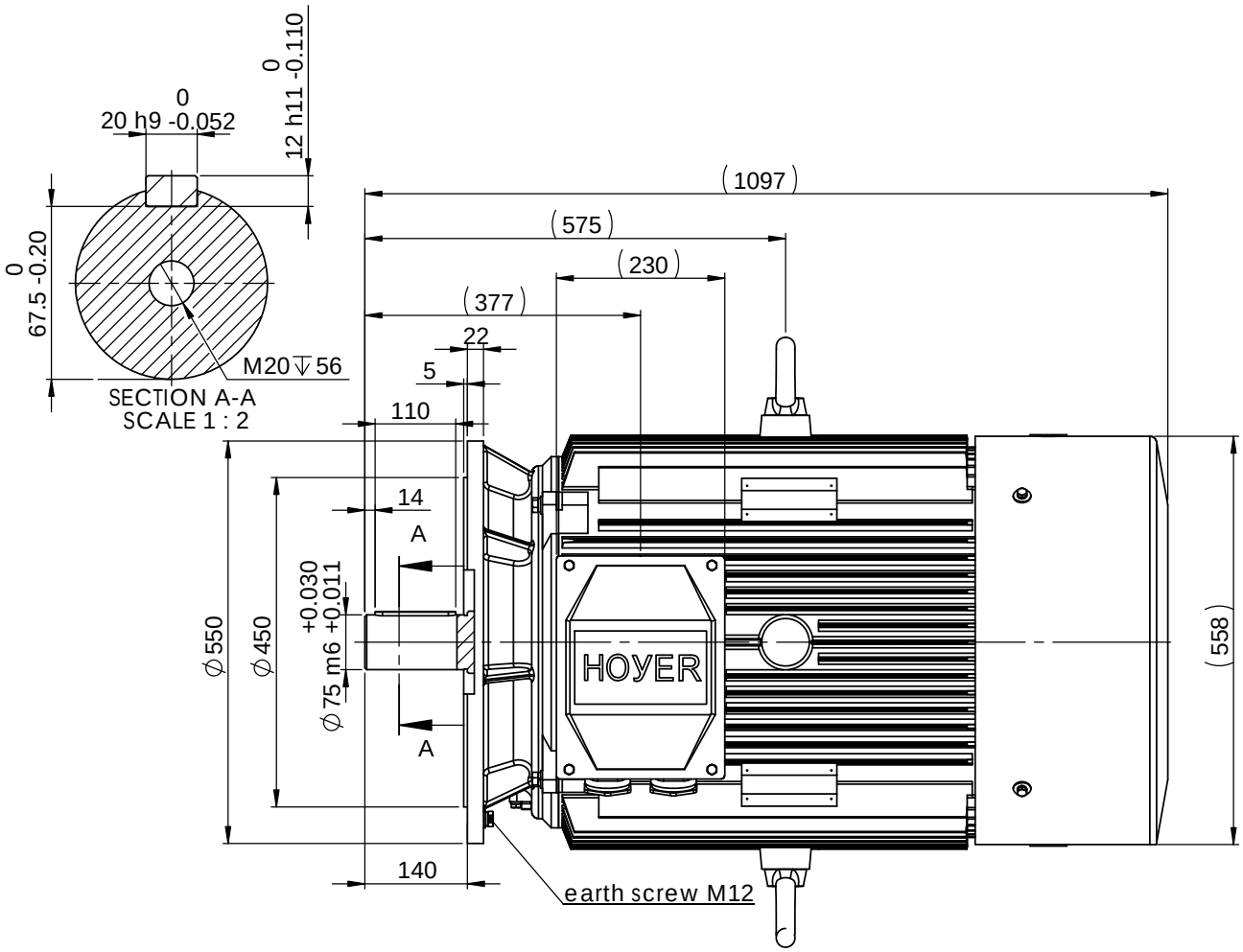

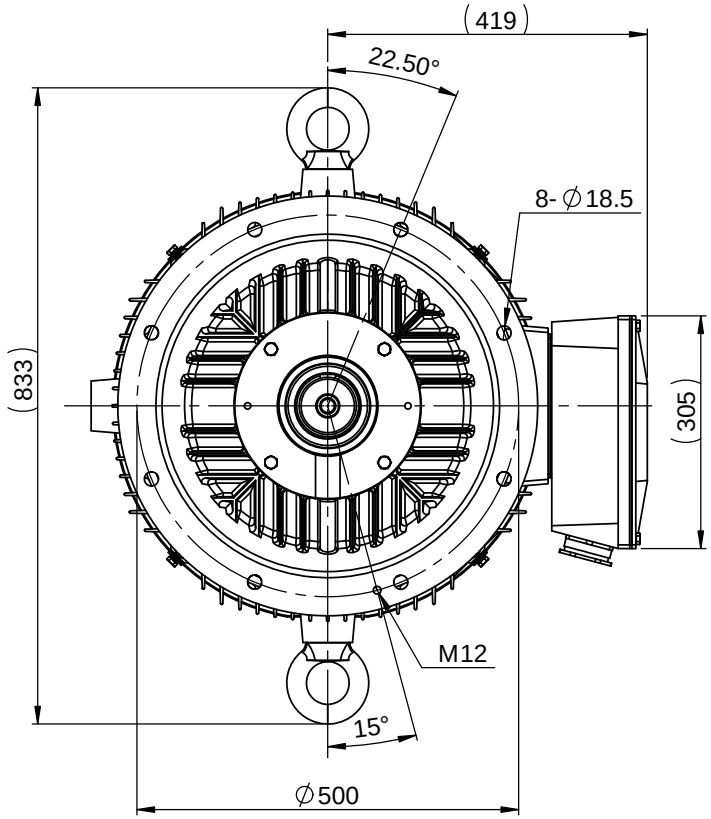

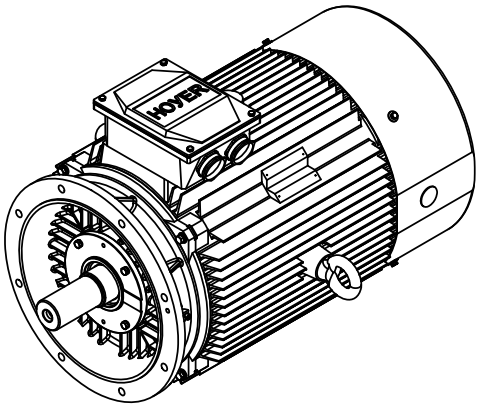

Remark:

1、Eye bolts 2XM30

2、Cable glands 2xM63x1.5，Blind caps 2xM20x1.5

HOYER	Hoyer Motors Over Hadstenvej 42, DK-8370 Hadsten Tel : +45 86982111 Fax: +45 86981779 www.hoyermotors.com	DEBUR AND BREAK SHARP EDGES	DO NOT SCALE DRAWING		REVISION	03
	NAME	SIGNATURE	DATE	TITLE: HMC2-280MB-4p-B5		
DRAWN	TIH		20140623			
CHK'D						
APPV'D						
MFG						
Q.A				MATERIAL: cast iron	DWG NO. 72139	A3
				WEIGHT: Kg	SCALE:1:20	SHEET 1 OF 1

© 2010 Hoyer Motors All intellectual property rights and all rights in know-how in relation to this drawing may not be reproduced, stored, or transmitted in any form by any means (electronic, mechanical,photocopying, recording or otherwise) without the prior written consent of Hoyer Motors. It is to be used only for the purposes specified by Hoyer Motors and for no other purpose.