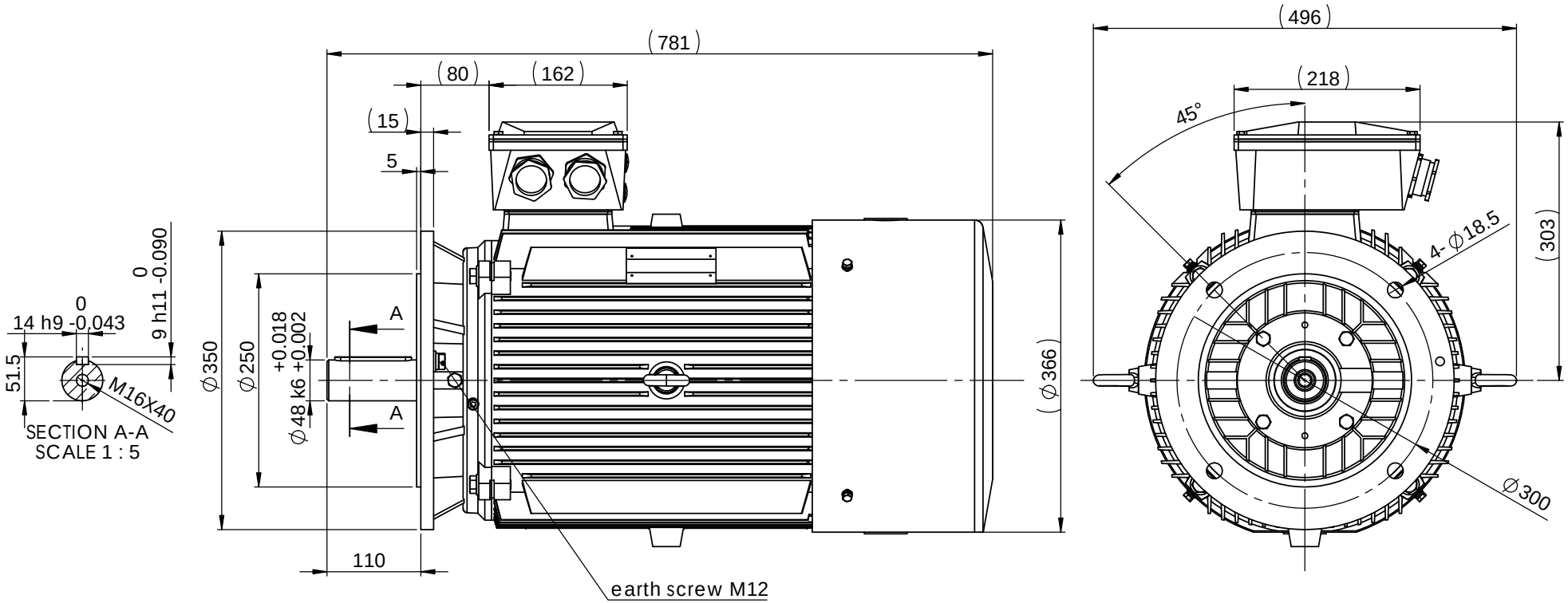


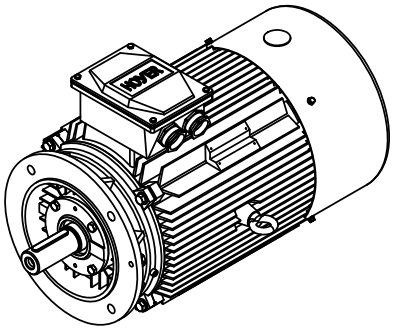

## Remark:

1、Eye bolts are 2XM12

2、Cable glands 2xM40x1.5， Blind caps 2xM20x1.5

| | | | | | | |
|---|---|---|---|---|---|---|
| HOYER EXCEEDING EXPECTATIONS | Hoyer Motors<br>Over Hadstenvej 42, DK-8370 Hadsten<br>Tel : +45 86982111<br>Fax: +45 86981779<br>www.hoyermotors.com | | | DEBUR AND BREAK SHARP EDGES | DO NOT SCALE DRAWING | REVISION 01 |
| | NAME | SIGNATURE | DATE | | TITLE: HMC2-180LA-4-B5 | |
| DRAWN | TIH | | 20140812 | | | |
| CHK'D | | | | | | |
| APPV'D | | | | | | |
| MFG | | | | | | |
| Q.A | | | | MATERIAL: cast iron | DWG NO. 79519 | A3 |
| | | | | WEIGHT: kg | SCALE:1:10 | SHEET 1 OF 1 |

© 2010 Hoyer Motors All intellectual property rights and all rights in know-how in relation to this drawing may not be reproduced, stored, or transmitted in any form by any means (electronic, mechanical,photocopying, recording or otherwise) without the prior written consent of Hoyer Motors. It is to be used only for the purposes specified by Hoyer Motors and for no other purpose.