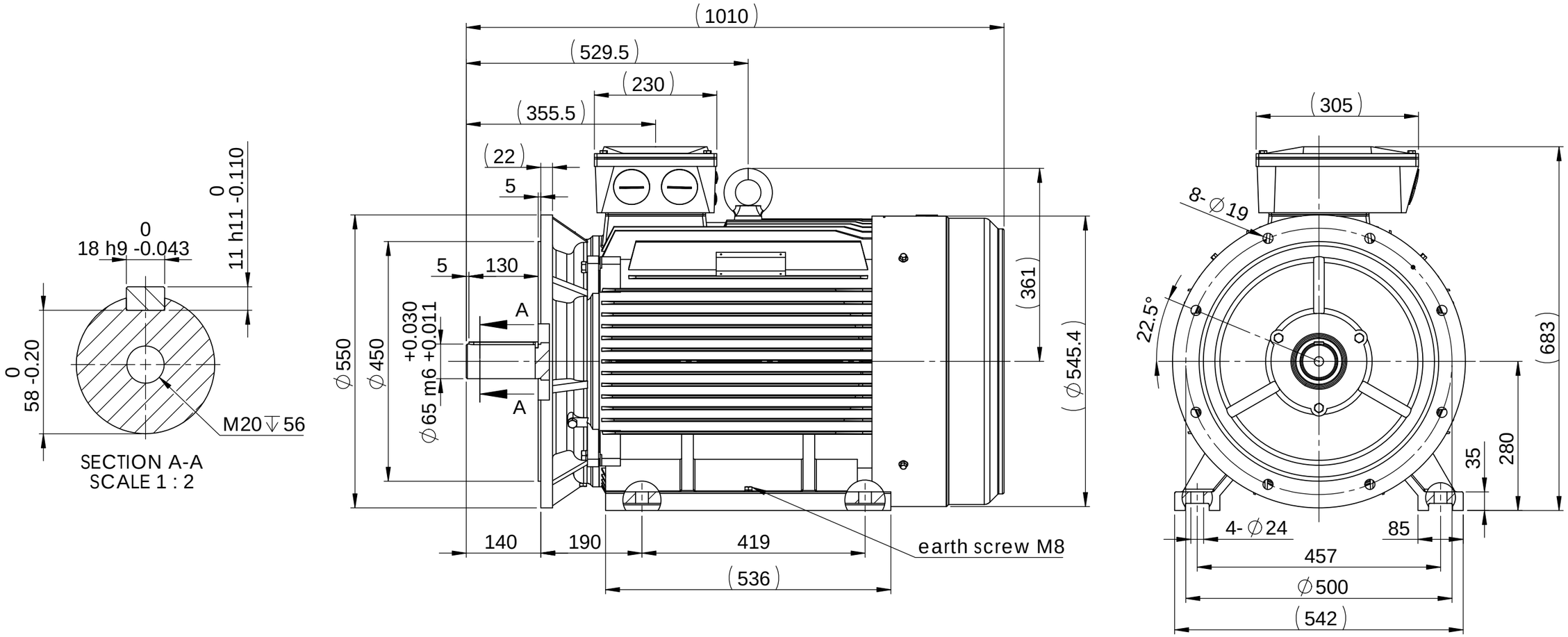

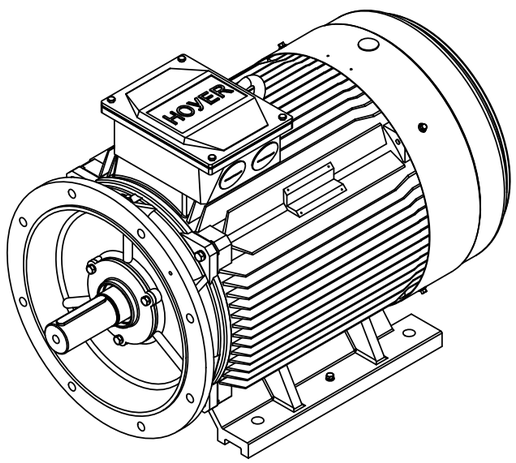

Remark:

1、Eye bolt M24

2、Blind caps are 2xM63x1.5 and 2xM20x1.5

HOYER
EXCEEDING EXPECTATIONS

Hoyer Motors
Over Hadstenvej 42, DK-8370 Hadsten
Tel : +45 86982111
Fax: +45 86981779
www.hoyermotors.com

DEBUR AND BREAK SHARP EDGES

DO NOT SCALE DRAWING

REVISION 01

	NAME	SIGNATURE	DATE
DRAWN	JJI		20140902
CHK'D			
APPV'D			
MFG			
Q.A			

TITLE: HMC3-280M-2p-B35

MATERIAL: cast iron

WEIGHT: kg

DWG NO. 90065

A3

SCALE:1:20

SHEET 1 OF 1

© 2010 Hoyer Motors All intellectual property rights and all rights in know-how in relation to this drawing may not be reproduced, stored, or transmitted in any form by any means (electronic, mechanical,photocopying, recording or otherwise) without the prior written consent of Hoyer Motors. It is to be used only for the purposes specified by Hoyer Motors and for no other purpose.