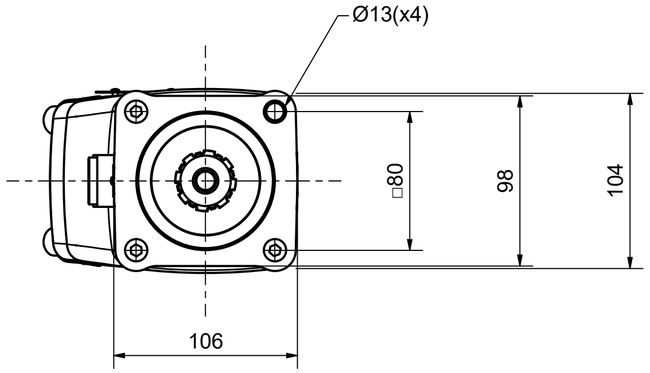

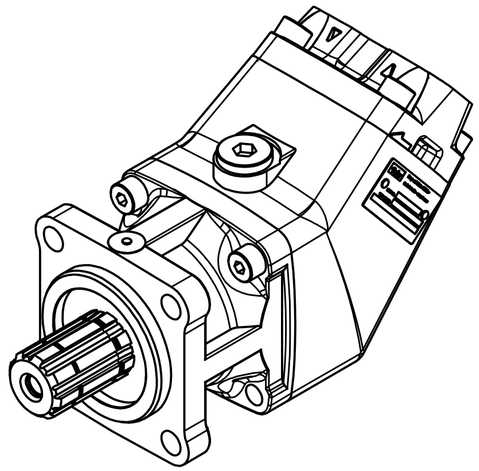

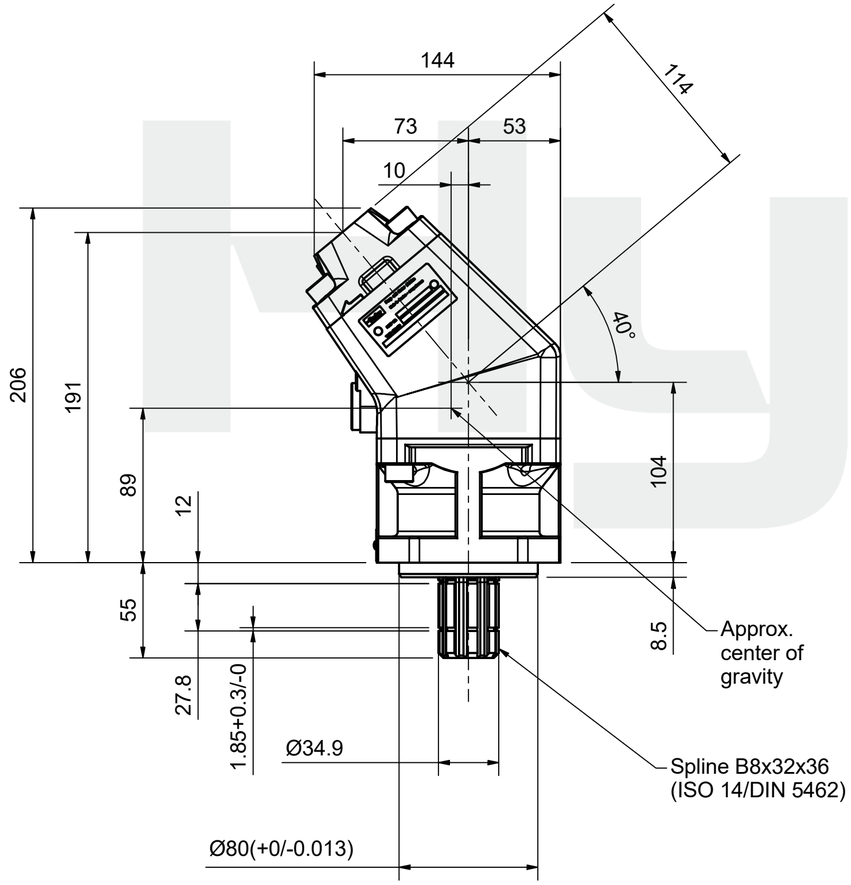

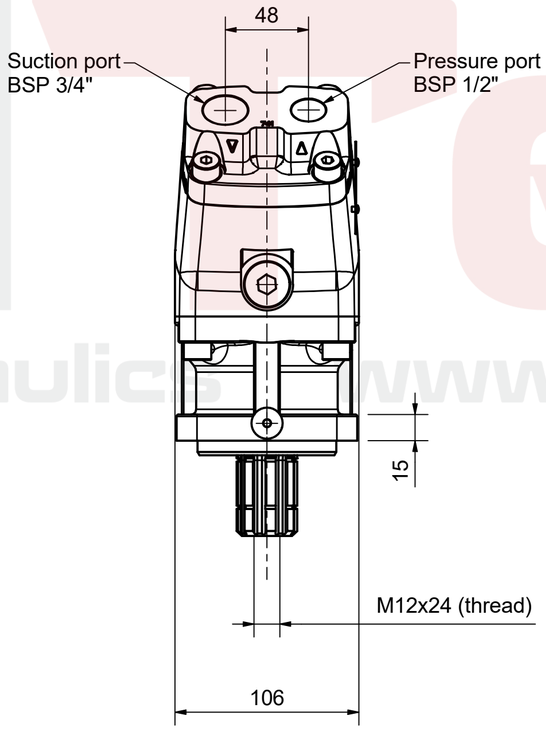

HydTec
Hydraulics www.hydtec.se

Disclaimer:
Parker PMDE has a continuous policy of product development and although the Company reserves the right to change specifications, it attempts to keep customers informed of any alterations. This publication is for general information only and customers are requested to contact their local Parker dealer for detailed information and advice on a products suitability for specific applications. All products are sold subject to the company's standard conditions of sale.

ORDERING NUMBER

PUMP/MOTOR	3782211
SUCTION FITTING	N/A
BPV	N/A

F1 PUMP

Parker

Pump & Motor Division Europe

WHERE TO BUY